PRECAST CONCRETE

GREASE INTERCEPTOR (H-20)

MONOLITHIC BODY
NO SEAMS OR JOINTS

1000 GALLON CAPACITY
SUITABLE FOR AASHTO HS-20-44 LOADINGS

IT IS THE EXCAVATOR'S OR INSTALLER'S RESPONSIBILITY TO REQUEST OUR *INSTALLATION GUIDELINES* PRIOR TO INSTALLING THIS TANK

6" THICK FLOOR
6" THICK WALLS
8" THICK LID

2 COMPARTMENT TANK WITH APPROXIMATELY 60% OF CAPACITY ON INLET SIDE

TANK IS PROVIDED WITH NOTCHES IN SIDEWALLS FOR SLIP-IN DIVIDER WALL

WITHSTANDS UP TO 6' OF BURY, RISERS ARE AVAILABLE FOR INLET & OUTLET

OPTIONS:
- 24" I.D. MANHOLE RISERS
- GAS TIGHT CAST IRON RINGS & COVERS

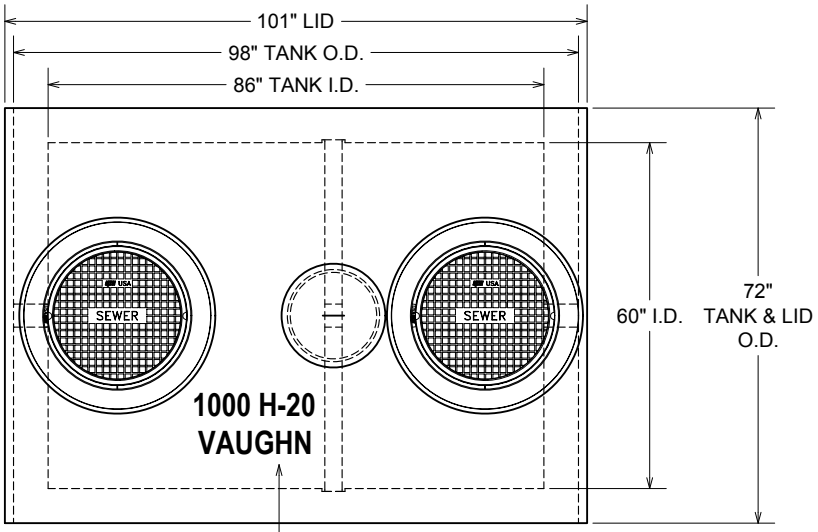

DURING PRODUCTION, "TANK SIZE" & "VAUGHN" ARE STAMPED IN LID, "IN" & "OUT" ARE MARKED ON TANK ENDS

PLAN VIEW

APPROVED BY: _____

DATE: _____

OUR STANDARD 24" DIAMETER CAST IRON RINGS & COVERS, TYP. OF 2

24" I.D. MANHOLE RISER AS REQUIRED, TYP. INLET/OUTLET END; AVAILABLE IN 2", 3", 4", 6", 8" & 12" HEIGHTS

JOINT SEALANT, OR CONTRACTOR TO GROUT

PIPING BLOCKOUTS WITH PIPE SEALS CAST IN TANK FOR INLET & OUTLET PIPING (TYPICAL)

CONTRACTOR'S 4" PIPES

VCP SUPPLIED 4" SDR35 INLET & OUTLET TEES

18" DIA. REMOVABLE INSPECTION LID OVER DIVIDER

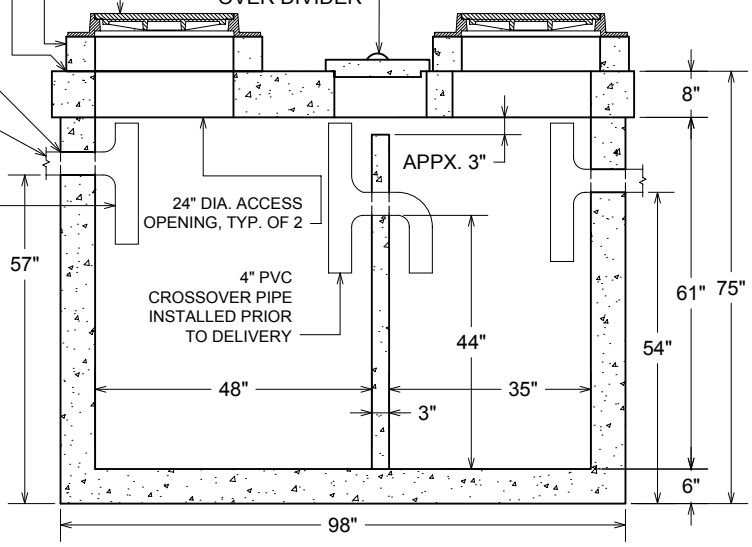

SECTION VIEW

TANK WEIGHTS:
- TANK LID : 5,400 LBS.
- TANK WITH DIVIDER ONLY : 14,700 LBS.
- COMPLETE INTERCEPTOR : 20,100 LBS.

DIGGING SPECIFICATIONS:
- 57" BELOW THE INLET
- EXCAVATION: 7'-0" WIDE X 10'-0" LONG
- SEE OUR *INSTALLATION GUIDELINES* PRIOR TO INSTALLING THIS TANK

CONCRETE : 4,000 P.S.I. (MINIMUM)
REINFORCING : GRADE 60 MINIMUM

ACTUAL DIMENSIONS OF CONCRETE PRODUCTS MAY VARY SLIGHTLY

DRAWING IS NOT TO SCALE

1000 GAL GI, H20.DWG
DATE CREATED: 10/10
UPDATED: ----------

vaughn concrete products, inc.

12650 Tucson Street • Henderson, Colorado 80640 • 303-659-3747, Fax 303-659-1333
2671 South Greeley Hwy • Cheyenne, Wyoming 82007 • 307-634-0695, Fax 307-634-0694
10021 Amarillo Blvd East • Amarillo, Texas 79108 • 806-374-3747, Fax 806-335-3717

www.vaughnconcreteproducts.com