PRECAST CONCRETE

GREASE INTERCEPTORS

2000 GALLON & LARGER CAPACITIES

APPROVED BY : _____

DATE : _____

SELECT SIZE:

2000 ____

2500 ____

3000 ____

3500 ____

4000 ____

IT IS THE EXCAVATOR'S OR INSTALLER'S RESPONSIBILITY TO REQUEST OUR *INSTALLATION GUIDELINES* PRIOR TO INSTALLING THIS TANK

PLAN VIEW

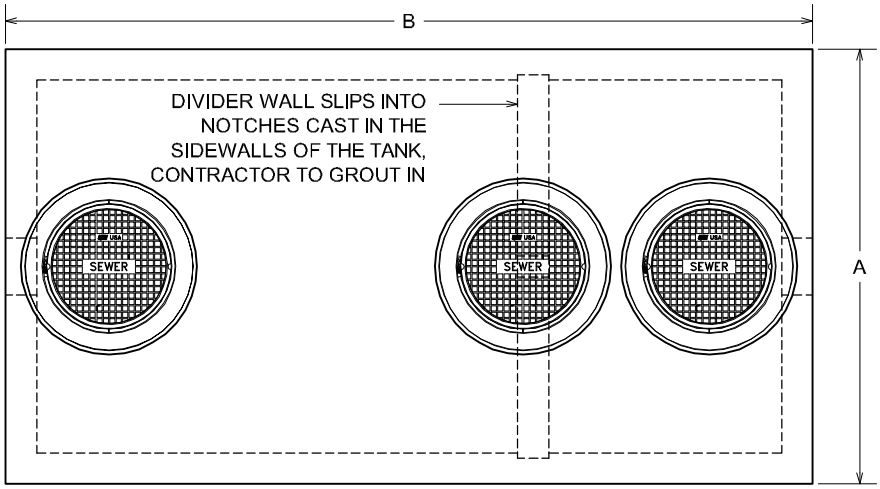

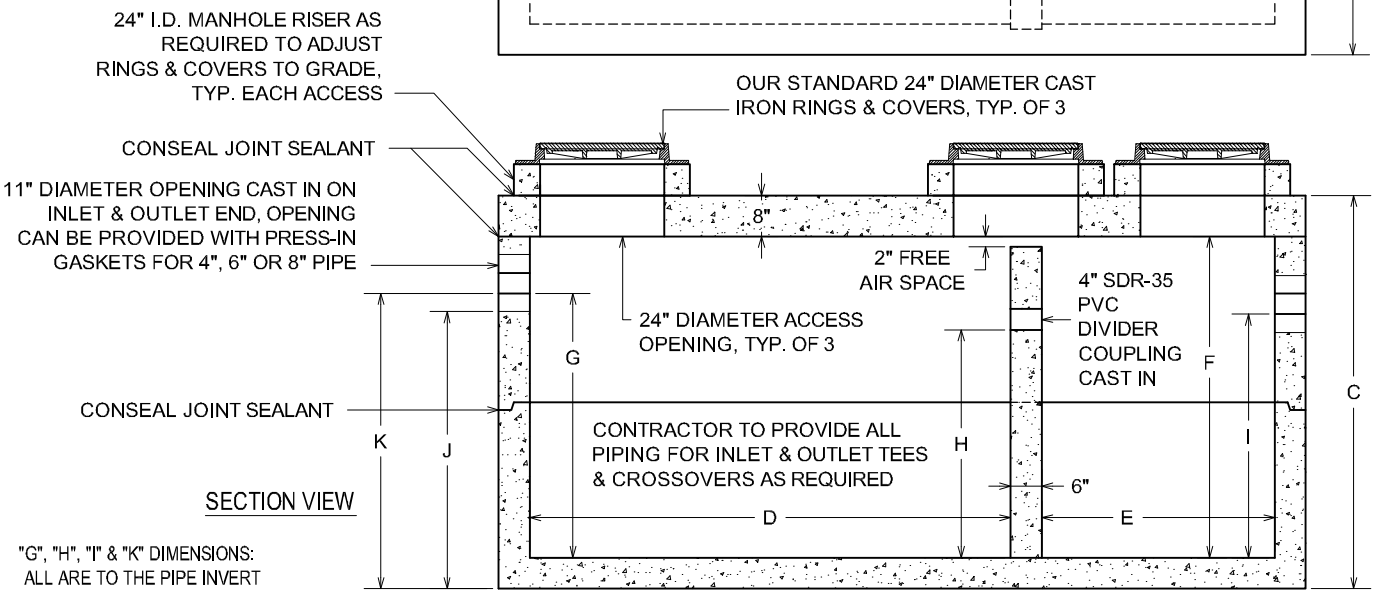

SECTION VIEW

"G", "H", "I" & "K" DIMENSIONS: ALL ARE TO THE PIPE INVERT

* "J" DIMENSION:
IS APPROXIMATE HEIGHT FROM BOTTOM OF PRECAST UNIT TO BOTTOM OF 11" HOLE, NOT TO BOTTOM OF THE PIPE INVERT

** "K" DIMENSION:
IS FOR DIGGING INFORMATION ONLY, APPROXIMATE HEIGHT FROM BOTTOM OF PRECAST UNIT TO THE PIPE INVERT, EXCAVATION SHOULD ALLOW 1' ON EACH SIDE OF INTERCEPTOR FOR SLING & LIFTING BOLT REMOVAL

WALLS & FLOOR TO BE 6" THICK

REINFORCED FOR AASHTO HS-20-44 LOADINGS
CONCRETE: 5000 P.S.I. MINIMUM

LARGER SIZE UNITS UP TO 30,000 GALLONS ARE AVAILABLE - CALL FOR INFORMATION

DRAWING IS NOT TO SCALE

ACTUAL DIMENSIONS OF CONCRETE PRODUCTS MAY VARY SLIGHTLY

GREASE INTERCEPTOR DIMENSIONS					
	2000	2500	3000	3500	4000
A	7'-0"	7'-0"	7'-0"	7'-0"	7'-0"
B	13'-0"	13'-0"	13'-0"	17'-0"	17'-0"
C	76"	88"	100"	89"	98"
D	93"	93"	93"	120"	120"
E	45"	45"	45"	66"	66"
F	62"	74"	86"	75"	84"
G (4" PIPE)	51"	63"	75"	64"	73"
G (6" PIPE)	50"	62"	74"	63"	72"
G (8" PIPE)	49"	61"	73"	62"	71"
H	44"	56"	68"	57"	66"
I (4" PIPE)	47"	59"	71"	60"	69"
*J	53-1/2"	65-1/2"	77-1/2"	66-1/2"	75-1/2"
DIGGING DEPTH INFORMATION					
**K (4" PIPE)	57"	69"	81"	70"	79"
**K (6" PIPE)	56"	68"	80"	69"	78"
**K (8" PIPE)	55"	67"	79"	68"	77"
TOTAL APPROXIMATE WEIGHTS (IN LBS)					
	31,500	34,900	38,200	43,500	46,800
HEAVIEST PIECE (MAX. WEIGHT) BASED ON EQUAL HEIGHT SECTIONS (IN LBS)					
	15,000	16,200	17,400	20,500	22,000

2000+ GAL GLDWG
DATE CREATED: 11/ 05
UPDATED: 12/ 09

vaughn concrete products, inc.

12650 Tucson Street • Henderson, Colorado 80640 • 303-659-3747, Fax 303-659-1333
2671 South Greeley Hwy • Cheyenne, Wyoming 82007 • 307-634-0695, Fax 307-634-0694
10021 Amarillo Blvd East • Amarillo, Texas 79108 • 806-374-3747, Fax 806-335-3717
www.vaughnconcreteproducts.com