PRECAST CONCRETE

GREASE INTERCEPTOR

1000 GALLON CAPACITY WITH LID FOR TRAFFIC

STANDARD FOR COLORADO & WYOMING

IT IS THE EXCAVATOR'S OR INSTALLER'S RESPONSIBILITY TO REQUEST OUR *INSTALLATION GUIDELINES* PRIOR TO INSTALLING THIS TANK

MONOLITHIC BODY
NO SEAMS OR JOINTS

3" THICK FLOOR
4" THICK WALLS
8" THICK LID FOR TRAFFIC

2 COMPARTMENT TANK WITH APPROXIMATELY 60% OF CAPACITY ON INLET SIDE

TANK IS PROVIDED WITH NOTCHES IN SIDEWALLS FOR SLIP-IN DIVIDER WALL

WITHSTANDS UP TO 6' OF BURY, RISERS ARE AVAILABLE FOR INLET & OUTLET

OPTIONS:
- 24" I.D. MANHOLE RISERS
- GAS TIGHT CAST IRON RINGS & COVERS

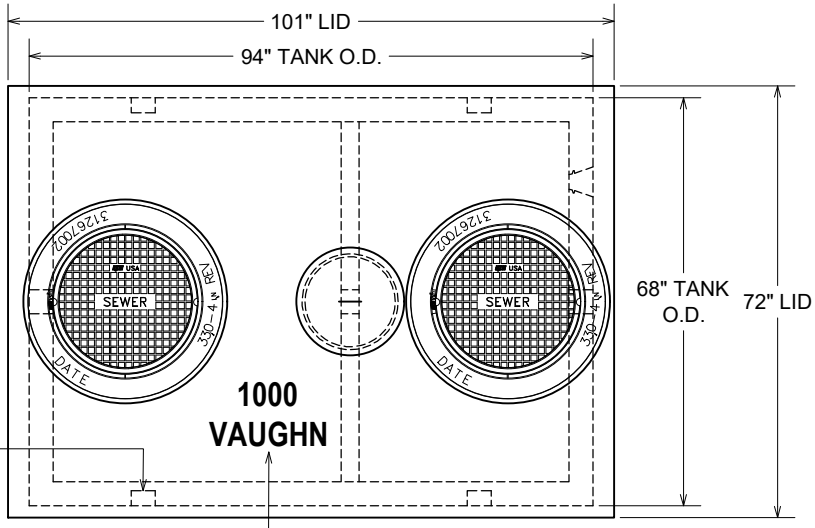

PIPING KNOCKOUTS 19" FROM END OF TANK TO CENTER OF KNOCKOUT TO ALLOW FOR CONCRETE TO BE BROKEN OUT TO ALLOW FOR SIDE INLET OR OUTLET PIPE AT SAME HEIGHT AS STANDARD INLET & OUTLET, TYP. OF 4

DURING PRODUCTION, "TANK SIZE" & "VAUGHN" ARE STAMPED IN LID, "IN" & "OUT" ARE MARKED ON TANK ENDS

PLAN VIEW

APPROVED BY: _____

DATE: _____

OUR STANDARD 24" DIAMETER CAST IRON RINGS & COVERS, TYP. OF 2

24" I.D. MANHOLE RISER AS REQUIRED, TYP. INLET/OUTLET END; AVAILABLE IN 2", 3", 4", 6", 8" & 12" HEIGHTS

CONSEAL JOINT SEALANT, OR CONTRACTOR TO GROUT

PIPING BLOCKOUTS WITH POLYLOK PIPE SEALS CAST IN TANK FOR INLET & OUTLET PIPING (TYPICAL)

CONTRACTOR'S 4" PIPES

CONTRACTOR SUPPLIED
4" SDR35 INLET & OUTLET TEES

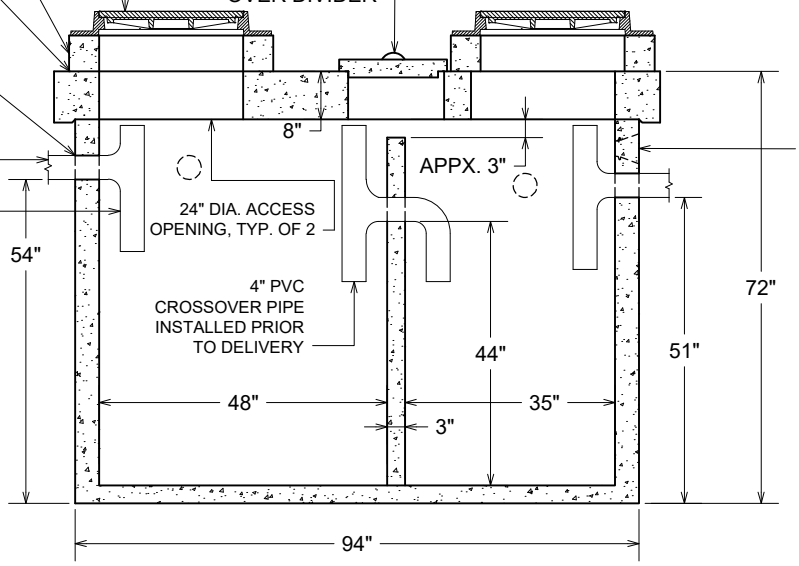

POLYLOK PIPE SEAL IS CAST IN ON THE OUTLET END FOR OPTIONAL VENT, 20" OVER & 5" ABOVE OUTLET

TANK WEIGHTS:
- TANK LID : 5,400 LBS.
- TANK WITH DIVIDER ONLY : 8,000 LBS.
- COMPLETE INTERCEPTOR : 13,400 LBS.

DIGGING SPECIFICATIONS:
- 54" BELOW THE INLET
- EXCAVATION: 7'-0" WIDE X 10'-0" LONG
- SEE OUR *INSTALLATION GUIDELINES* PRIOR TO INSTALLING THIS TANK

CONCRETE : 4,000 P.S.I. (MINIMUM)
REINFORCING : REBAR & WELDED WIRE FABRIC

ACTUAL DIMENSIONS OF CONCRETE PRODUCTS MAY VARY SLIGHTLY

SECTION VIEW

DRAWING IS NOT TO SCALE

1000 GAL GI, TRAFFIC.DWG
DATE CREATED: 11/ 04
UPDATED: 8/ 2021

vaughn concrete products, inc.

12650 Tucson Street • Henderson, Colorado 80640 • 303-659-3747, Fax 303-659-1333
2671 South Greeley Hwy • Cheyenne, Wyoming 82007 • 307-634-0695, Fax 307-634-0694

www.vaughnconcreteproducts.com